hansgrohe

Logis
Single lever basin mixer 70 with push-open waste
Surfaces: **chrome** Art. no. : **71077000**

Description

product features

- Consists of: single lever basin mixer, waste set
- ComfortZone 70 provides space for greater freedom of movement
- free-standing installation
- spout 107 mm long
- normal spray
- Flow rate (at 3 bar): 5 l/min
- ceramic cartridge
- push-open waste 1¼"
- Material waste set: synthetic
- please specify when ordering if required for low pressure
- WRAS 1410017
- WRAS 1410017
- WRAS 1410017

Article Details

Price excl. VAT £ 92.50

Technology

Air Power | Eco Smart | Comfort Zone

Certificates

WRAS APPROVED PRODUCT | kiwa

Product image

Scale drawing

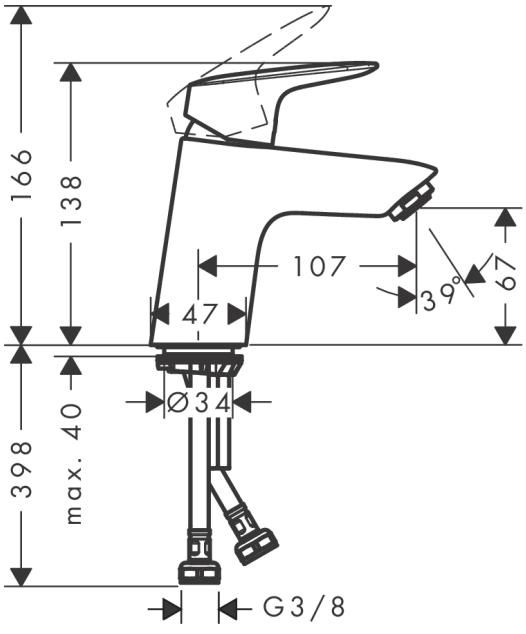

Logis
Single lever basin mixer 70 with push-open waste
Surfaces: **chrome** Art. no. : **71077000**
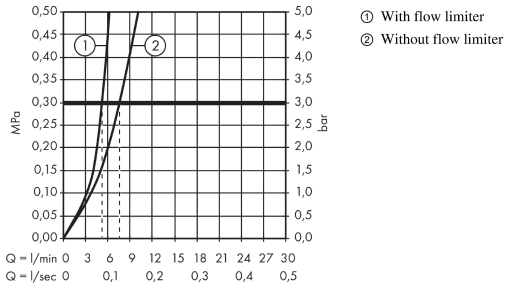
Flowchart