PRODUCT DATA SHEET

Date created: 11/04/2017

Lato 170x70cm Idealform Water Saving Bath

ILLUSTRATED

U8542	Lato 170 x 70cm Idealform water saving bath no handgrips or tapholes
A6520	Lambro 2 hole bath filler
E3194	Unilux 170cm front panel
E3169	Unilux 70cm end panel
E5795	Waste 1½" bath pop-up waste and overflow components only
E5800	Bath pop-up waste operating handle and cover only
A5901	TMV Thermostatic mixing valve 22mm

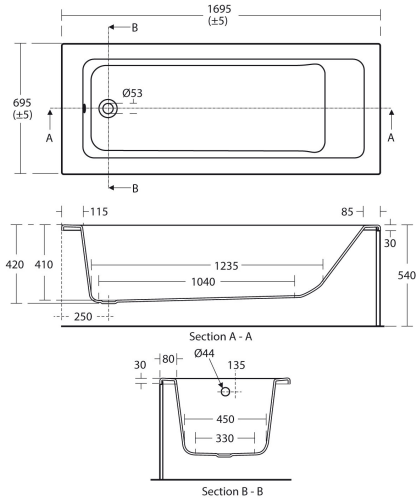

ILLUSTRATED PRODUCT DETAILS

Weights

U8542	22.00 KG
A6520	2.96 KG
E3194	3.65 KG
E3169	2.58 KG
E5795	1.34 KG
E5800	0.82 KG
A5901	1.70 KG

Materials

U8542	Toughened Safety Glass
A6520	Chrome Plated Metal
E3194	Acrylic
E3169	Acrylic
E5795	Chrome Plated Metal
E5800	Chrome Plated Metal
A5901	Chrome Plated Metal

Finishes

U8542	White (01)
A6520	Chrome (AA)
E3194	White (01)
E3169	White (01)
E5795	Neutral / No Finish (67)
E5800	Chrome (AA)
A5901	Chrome (AA)

Capacity

U8542	139 litres (to overflow)

Designer

Robin Levien, RDI

Standards

Constructed to EN 198:2008. EN 14516

Special Notes

Consideration should be given to safe hot water delivery and the use of an appropriate temperature reduction device see A5901AA or Part G for guidance.

ACCREDITATIONS

WRAS APPROVED PRODUCT

Ideal Standard (UK) Ltd. makes every effort to ensure that the information provided on its website is accurate. However, we cannot guarantee this, and accept no liability for any information or advice given via its website.